WOOPL TECH

Compact 5-Stage Bassic Reverse Osmosis

BassicPro



This compact 5-stage reverse osmosis system uses advanced water-treatment technology and is specially designed for home use. A 5-stage reverse osmosis unit for drinking water treatment, filtering out sediment and removing unpleasant tastes and odours. Ideal for better-tasting water, and for reducing salinity and impurities by up to 95%. Provides pure water for drinking and cooking. Includes a tap and a complete installation kit. It's a compact unit that fits under the sink.

75 GPD

ECOLOGICAL SYSTEM

AQUA ESPAÑA

AQUA EUROPA

TECHNICAL SPECIFICATIONS

Model:	Compact 5-Stage Bassic
Capacity:	75GPD manual
Discharge type	flush
Operating pressure:	0.3–0.6 MPa
Operating temperature:	1–48°C quick-fit
Mounting type:	installation
Filter cartridge:	PP+GAC+CTO+RO+T33A
Tap:	MINI ROBIN tap 3-gallon plastic tank
RO tank:	single O-ring
Filter housing:	
Pack size:	41*35*54.5 cm

100V-240V — 50 / 60Hz

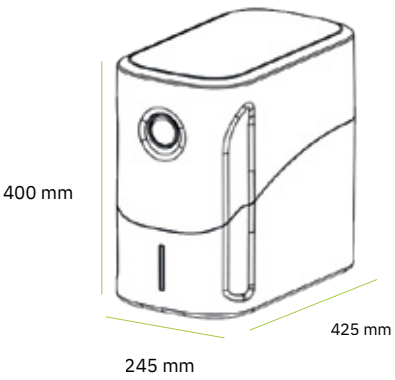

commercial@woplfontaine.com

+212 6 60 83 73 16/ 05 20 17 19 79

www.wopl.ma